Menu

COMET
AGRICULTURAL DIVISION

POMPE A MEMBRANE
DIAPHRAGM PUMPS
POMPES A MEMBRANE
MEMBRANPUMPEN
BOMBAS DE MEMBRANA
POMPE A MEMBRANA
ΑΝΤΛΙΕΣ ΔΙΑΦΡΑΓΜΑΤΟΣ

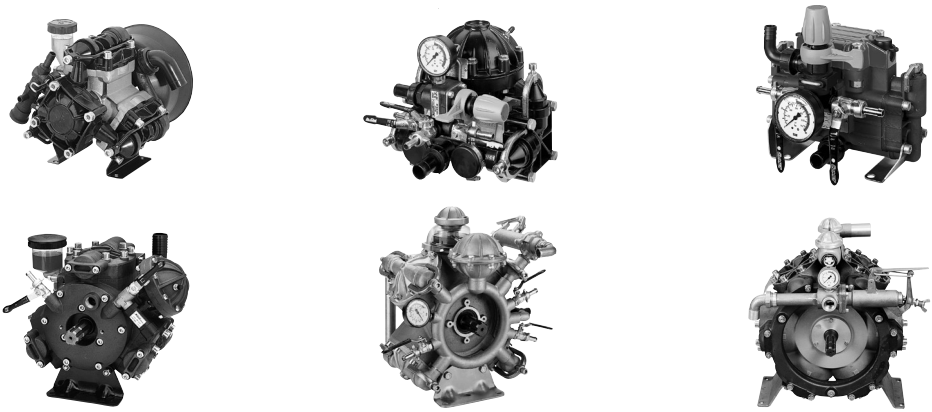

BP - MP - P - APS - IDS - CLA

(IT)	MANUALE DI USO E MANUTENZIONE
(GB)	USE AND MAINTENANCE MANUAL
(F)	MANUEL D'UTILISATION ET D'ENTRETIEN
(D)	BETRIEBS-UND WARTUNGSANLEITUNG
(E)	MANUAL DE USO Y MANTENIMIENTO
(P)	MANUAL DE USO E MANUTENÇÃO
(GR)	ΟΔΗΓΙΕΣ ΧΡΗΣΗΣ ΚΑΙ ΣΥΝΤΗΡΗΣΗΣ

Leggere attentamente questo manuale d'istruzione prima dell'uso
Carefully read this instruction booklet before using
Lire attentivement ce manuel avant utilisation
Vor Inbetriebnahme, Anleitung sorgfältig durchlesen
Lean con cuidado este manual antes de utilizar la bomba
Ler atenciosamente este manual de instrução antes do uso
Διαβάστε προσεκτικά το παρόν εγχειρίδιο οδηγιών πριν από τη χρήση.

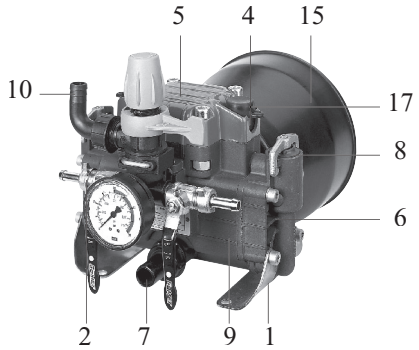

BP 20/15

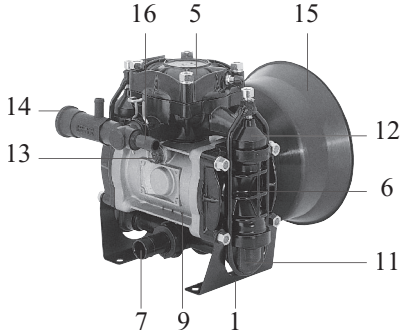

BP 40/15-BP 60

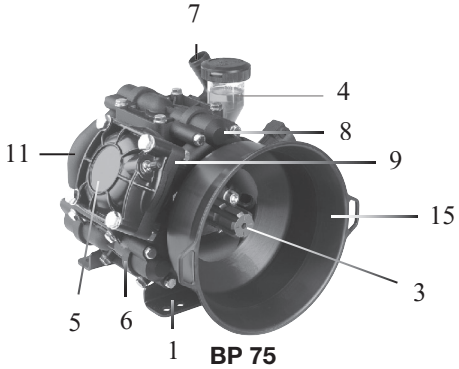

BP 75

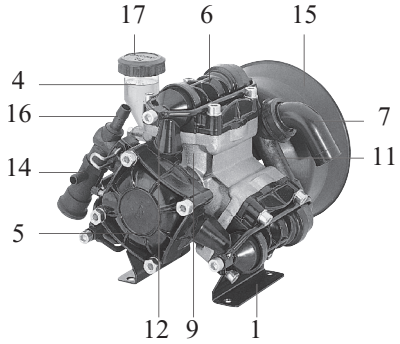

BP 105-BP 125

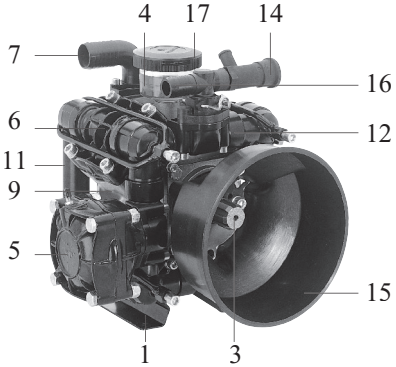

BP 151-BP 171

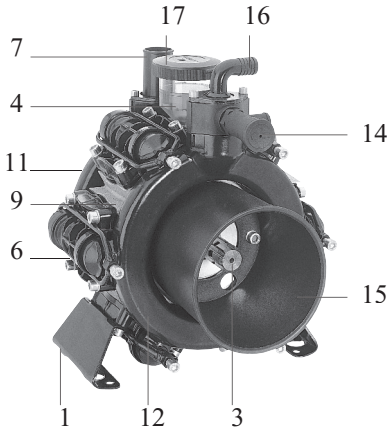

BP 205-BP 235-BP 280

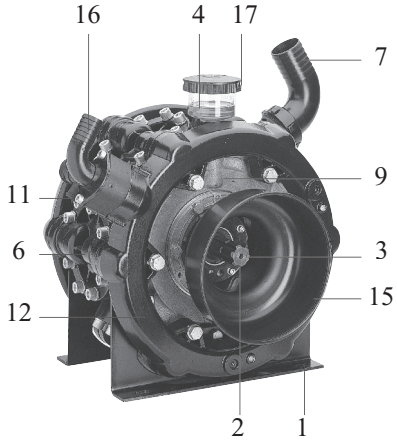

BP 265-BP 305

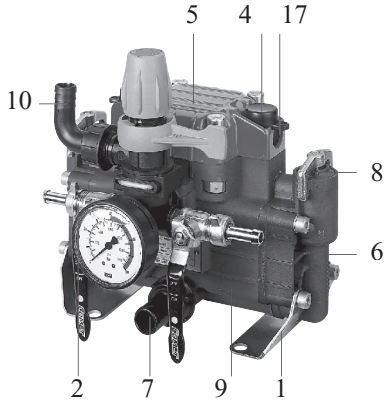

MP 20-MP 30

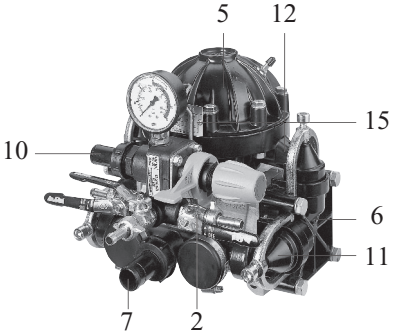

P 48-P48AP

2

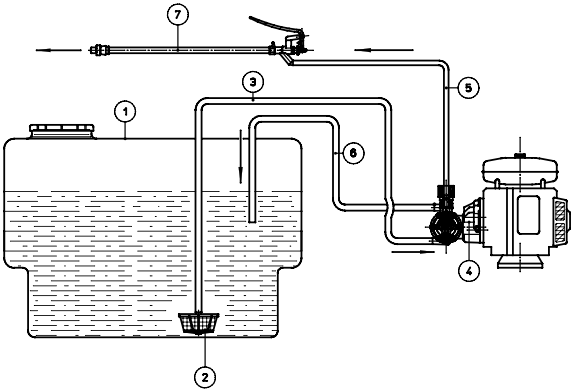

3

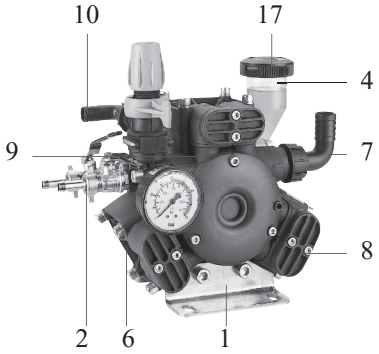

APS 31-APS 41

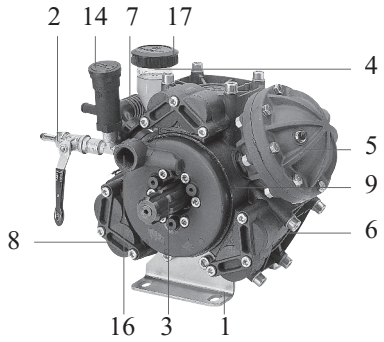

APS 51-APS 61-APS 71

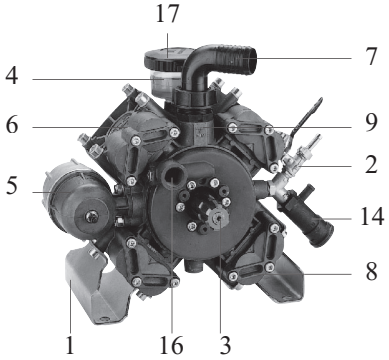

APS 96

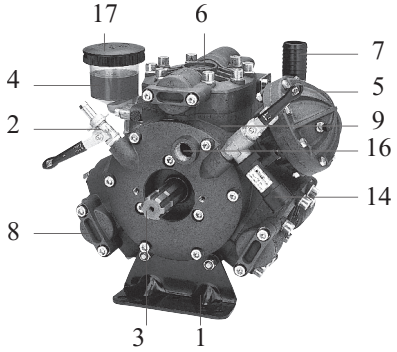

APS 101-APS 121

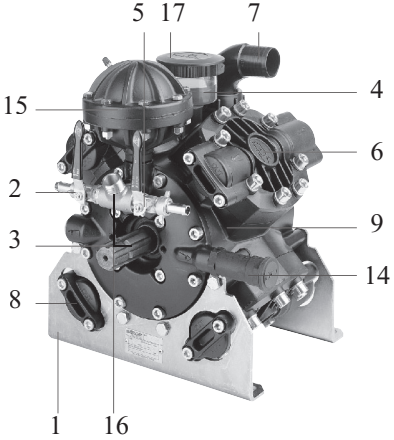

APS 145

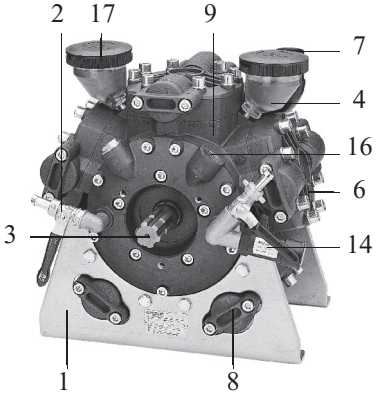

APS 141-APS 166

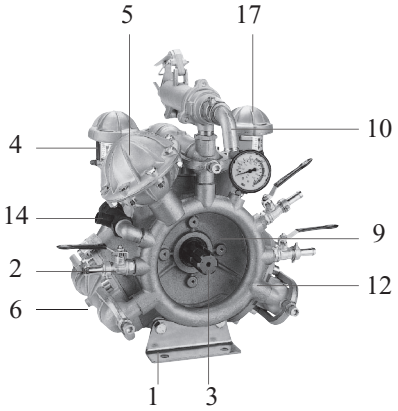

IDS 1000 - IDS 1300

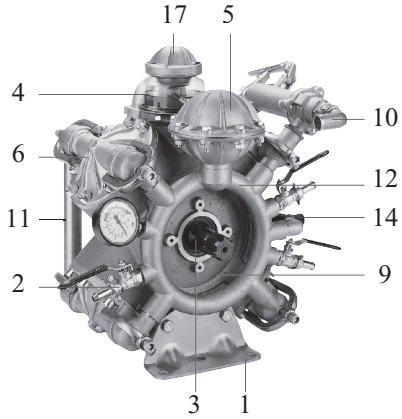

IDS 1400

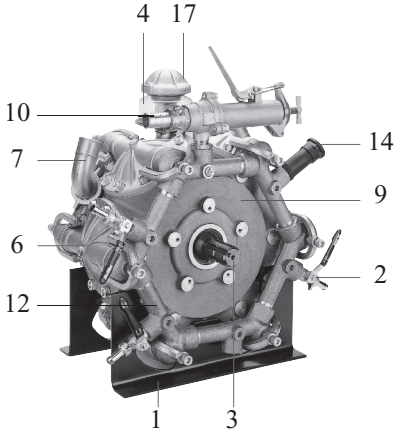

IDS 2200-IDS 2600

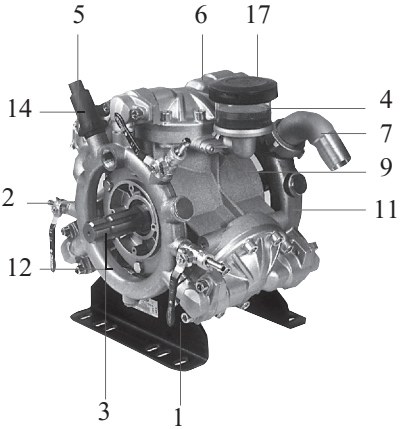

IDS 1401

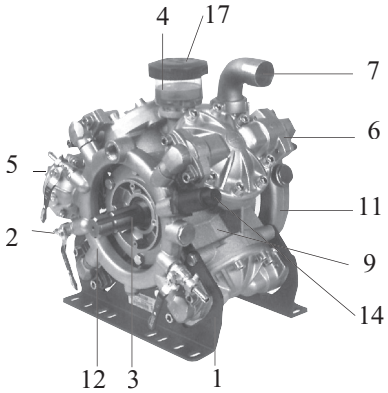

IDS 1701-IDS 2001

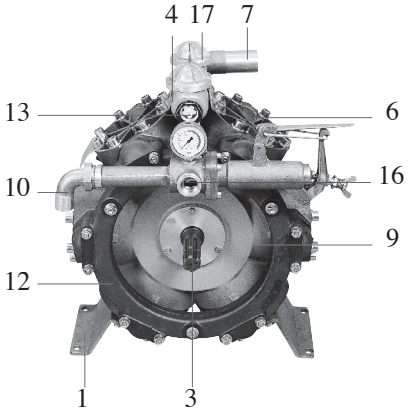

CLA 3000

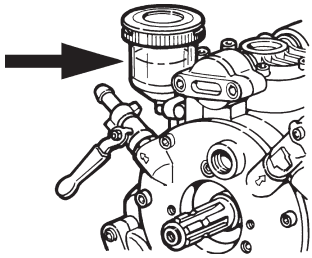

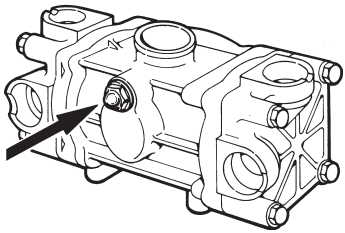

6

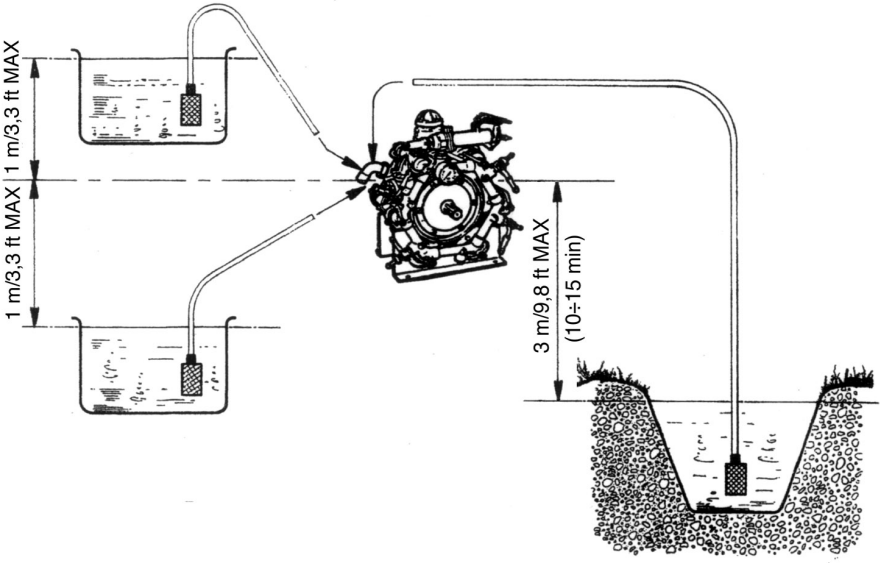

7

Italiano ..... pag. 8

English ..... pag. 29

Français ..... pag. 50

Deutsch ..... pag. 71

Español..... pag. 94

Português..... pag. 116

ΕΛΛΗΝΙΚΑ ..... pag. 138

NOTE

SUMMARY

PART ONE

1. GENERAL INFORMATION 30

1.1 TERMS OF THE GUARANTEE 30
1.2 ADDRESS OF THE MANUFACTURER 31
1.3 USE AND CONSERVATION OF THIS OPERATING AND MAINTENANCE MANUAL 31
1.4 SYMBOLS 31

2. FEATURES AND TECHNICAL SPECIFICATIONS 32

2.1 IDENTIFICATION OF COMPONENTS 34
2.2 SAFETY DEVICES 35
2.3 IDENTIFICATION LABEL 35

3. DESIGNATED USE 36

4. OPTIONAL ACCESSORIES 36

5. OPERATION 37

5.1 PRELIMINARY PROCEDURES 38
5.2 HYDRAULIC CONNECTIONS 39
5.3 START UP 39

6. SWITCHING OFF AND STORAGE 40

6.1 SWITCHING OFF 40
6.2 STORAGE 40

7. CLEANING AND MAINTENANCE 41

7.1 ROUTINE MAINTENANCE 41
7.1.1 Diaphragm rupture 41
7.2 SPECIAL MAINTENANCE 42

8. DISMANTLING AND DISPOSAL 42

9. PROBLEMS, CAUSES AND SOLUTIONS 42

PART TWO

1. REMOVING THE APPLIANCE FROM ITS PACKING MATERIALS 43

1.1 STANDARD ACCESSORIES 43

2. INSTALLATION 43

2.1 APPLICATIONS 44
2.2 HYDRAULIC CONNECTIONS 45

MANUFACTURER'S DECLARATION 48

INTRODUCTION

This manual is divided into two separate parts.
The first part is for use by both the end user and the Skilled Technician; the second part is only for use by the Skilled Technician.
The Skilled Technician can be:

- The manufacturer of the machine (e.g. motor driven pump) which incorporates the pump (from here on, "machine which incorporates the pump" may also stand for "system which incorporates the pump", as in the case of a pumping station, for example);
- a person, generally from the service centre, who has received appropriate training and is authorised to carry out special maintenance and repairs on the pump and on the machine which incorporates the pump. Any work on its electrical parts must be carried out by a Skilled Technician who is also a Qualified Electrician, i.e. a person with professional training who is authorised to check, install and repair electrical equipment correctly and according to current regulations in the country where the pump is installed.

PART ONE

1. GENERAL INFORMATION

Congratulations for choosing one of our products! We would like to remind you that we took the safety of the operator, the efficiency of its use and the protection of the environment into great consideration when designing and manufacturing this product.
In order to preserve its features over time, please read and follow this manual carefully.
Particular attention must be awarded to the parts with the following symbol:

⚠ **CAUTION**

as they contain important instructions regarding safety when using the pump.
The Manufacturer is not liable for damage caused by:

- failure to comply with these instructions and the instructions for the machine which incorporates the pump;
- use of the pump not included in the list in the "DESIGNATED USE" section;
- failure to comply with current safety regulations and regulations for the prevention of accidents in the workplace when using the pump;
- incorrect installation
- failure to carry out the anticipated maintenance;
- modifications or actions without prior authorisation by the Manufacturer;
- use of non-original or non-specific spare parts for this model of pump;
- repairs which were not completed by a Skilled Technician.

1.1 TERMS OF THE GUARANTEE

The guarantee is valid for a period of 24 months from the date on the sales document (receipt, invoice etc.) provided the guarantee certificate included with the documents for the pump was sent back to the Manufacturer within 10 days of the purchase date with all its parts filled in.
The purchaser has sole right to the replacement of the parts which the Manufacturer, or his authorised representative, deems faulty as regards their material or manufacture. This does not imply any right to compensation for any type of direct or indirect damage. Any costs for labour, packing and transportation are at the purchaser's expense.
Should the product be sent to the Manufacturer for repairs under this guarantee, it must be complete with all its original parts and not be tampered with upon arrival. Any request under this guarantee

will be denied if this is not the case.
All replaced parts become the exclusive property of the Manufacturer.
Any faults or failures which occur during or after the period of the guarantee do not imply the right to suspend payment or to any further extension.
This guarantee does not cover the replacement of the pump and automatically becomes void should the agreed terms of payment not be abided by.
The following are not covered by the guarantee:

- direct or indirect damage, of any type, caused by falls, incorrect use of the pump and failure to observe regulations regarding safety, installation, operation and maintenance which are contained in this manual and in the manual for the machine which incorporates the pump;
- damage caused by the inactivity of the pump for repairs;
- any parts which are subject to wear during normal use;
- any parts which are deemed faulty due to negligence or carelessness during use;
- damage caused by the use of non-original spare parts or accessories or not expressly authorised by the Manufacturer, and by repairs not completed by a Skilled Technician
  The guarantee becomes void should the pump, and especially its safety devices, be tampered with and the Manufacturer is no longer liable.

The Manufacturer reserves the right to make any modification at any time which it deems necessary to improve the product and is not liable to make these modifications to previously manufactured products, be they delivered or under delivery.
The conditions in this section exclude any previous explicit or implicit condition.

1.2 THE ADDRESS OF THE MANUFACTURER

The address of the manufacturer of the pump is given in the **"Declaration of the Manufacturer"** at the end of this part of the instruction manual.

1.3 USE AND CONSERVATION OF THIS OPERATING AND MAINTENANCE MANUAL

The operating and maintenance manual is an integral part of the pump and must be kept in a safe place for future reference so that it may be readily consulted in case of need.
The operating and maintenance manual contains important information for the safety of the operator and of any people near him and for the protection of the environment.
In case of deterioration or loss, a new copy should be requested from the dealer or from an authorised service centre.
If the pump is passed on to a third party, please make sure this operating and maintenance manual is also given to the new owner.
We take great care when drawing up our manual. If you note any mistakes, please do inform the Manufacturer or an authorised service centre.
The Manufacturer reserves the right to modify, update and correct this manual without notice.
It is illegal to copy this manual, even partially, without prior authorisation by the Manufacturer.

1.4 SYMBOLS

The symbol: ⚠ **CAUTION**

next to certain parts of the text, is to indicate that there is the firm possibility of injury to persons if the relative instructions and indications are not followed.

The symbol: **WARNING**

next to certain parts of the text, is to indicate that there is the possibility of damaging the pump if the relative instructions are not followed.

2. FEATURES AND TECHNICAL SPECIFICATIONS

		BP 20/15	BP 40/15	BP 60	BP 75	BP 105	BP 125	BP 151	BP 171	BP 205	BP 235	BP 280	BP 265	BP 305	MP 20	MP 30	P48 P 48P
MECHANICAL CONNECTION Absorbed power at maximum rotation speed and pressure		0,61 kW 0,83 CV	1,32 kW 1,80 CV	2,4 kW 3,3 CV	1,4 kW 1,9 CV	4,0 kW 5,5 CV	5,0 kW 6,8 CV	5,7 kW 7,8 CV	7,0 kW 9,6 CV	7,5 kW 10,2 CV	8,6 kW 11,7 CV	9,8 kW 13,3 CV	10,5 kW 14,3 CV	11,6 kW 15,8 CV	1,2 kW 1,6 CV	1,7 kW 2,3 CV	3,0 kW 4,1 CV
Maximum speed of rotation of pump Minimum speed of rotation of pump		550 RPM 400 RPM															
PUMP OIL		AGIP SAE 20W/40															
HYDRAULIC CONNECTION Maximum inlet water temperature Minimum inlet water temperature Maximum intake depth Maximum inlet water pressure		40° C 104° F 5° C 41° F 1 m - 3,3 ft (for no longer than 10÷15 min: 3 m - 9,8 ft) 0,1 bar 1,45 psi															
PERFORMANCE AT MAXIMUM SPEED OF ROTATION Water flow at maximum pressure	l/min	18,7	10,5	58	68	104	117	138	162	193	222	248	252	296	19,5	29,2	51,7
	US gpm	4,9	39,9	15,3	18	27,5	30,9	36,5	42,8	51	59	66	67	78	5,2	7,7	13,7
Water flow at 0 bar	l/min	21,9	43,3	65	71	107	121	142	168	197	226	265	259	302	22,4	32,0	64,2
	US gpm	5,8	11,4	17,2	18,8	28,3	32,0	37,5	44,4	52	60	70	68	80	5,9	8,5	17,0
Maximum pressure	bar	15	15	20	15	20	20	20	20	20	20	20	20	20	30	30	20
	psi	217	217	290	217,5	290	290	290	290	290	290	290	290	290	435	435	290
Sound level dB(A)		<70	<70	<70	<70	<70	<70	<70	<70	<70	<70	<70	<70	<70	<70	<70	<70
WEIGHT	kg	7,2	9,8	9,8	10	12,9	13,0	24,0	24,0	32,0	32,0	35	55	55	6,6	6,6 kg	12,5
	lb	15,9	21,6	21, 6	22	28,4	28,6	52,9	52,9	70,5	70,5	77	121	121	14,6	14,6	27,6
	kg																12,7
	lb																28,0

All features and technical specifications are only indications. The Manufacturer reserves the right to modify the appliance as it deems necessary

		APS 31	APS 41	APS 51	APS 61	APS 71	APS 96	APS 101	APS 121	APS 145	APS 141	APS 166
MECHANICAL CONNECTION Absorbed power at maximum rotation speed and pressure		2,0 kW 2,7 CV	3,0 kW 4,1 CV	3,8 kW 5,2 CV	4,7 kW 6,4 CV	5,4 kW 7,3 CV	7,0 kW 9,5 CV	9,1 kW 12,3 CV	10,7 kW 14,5 CV	13,2 kW 18,0 CV	13,1 kW 17,8 CV	15,1 kW 20,5 CV
Maximum speed of rotation of pump Minimum speed of rotation of pump		550 RPM 400 RPM										
PUMP OIL		AGIP SAE 20W/40										
HYDRAULIC CONNECTION Maximum inlet water temperature Minimum inlet water temperature Maximum intake depth Maximum inlet water pressure		40° C 104° F 5° C 41° F 1 m - 3,3 ft (for no longer than 10÷15 mins: 3 m – 9.8 ft) 0,1 1,45 psi										
PERFORMANCE AT MAXIMUM SPEED OF ROTATION Water flow at maximum pressure	l/min	25	38	50,7	62,3	67,8	89	94	115	142	141	163
	US gpm	6,6	10,0	13,4	16,5	17,9	23,5	24,8	30, 4	37,5	37,2	43,1
Water flow at 0 bar	l/min	28	41	53,9	65,9	71,3	94	100	120	149	145	169
	US gpm	7,4	10,8	14,2	17,4	18,8	24,8	26,4	31,7	39,2	38,3	44,6
Maximum pressure	bar	40	40	40	40	40	40	50	50	50	50	50
	psi	580	580	580	580	580	580	725	725	725	725	725
Sound level dB(A)		<70	<70	<70	<70	<70	<70	<70	<70	<70	<70	<70
WEIGHT	kg	10	10	16,4	18,4	18,4	22,5	38	38	46	56	56
	lb	22	22	36,2	40,6	40,6	49,6	83,8	83,8	101	123,5	123,5

All features and technical specifications are only indications. The Manufacturer reserves the right to modify the appliance as it deems necessary

		IDS 1000	IDS 1300	IDS 1400	IDS 1401	IDS 1701	IDS 2001	IDS 2200	IDS 2600	CLA 3000
MECHANICAL CONNECTION Absorbed power at maximum rotation speed and pressure		9,2 kW 12,5 CV	10,5 kW 14,5 CV	12,5 kW 17,0 CV	12,2 kW 16,6 CV	14,6 kW 19,9 CV	16,5 kW 22,4 CV	19,3 kW 26,2 CV	19,3 kW 32,1 CV	39 kW 53 CV
Maximum speed of rotation of pump		550 RPM								500 RPM
Minimum speed of rotation of pump		400 RPM								400 RPM
PUMP OIL		AGIP SAE 20W/40								
HYDRAULIC CONNECTION Maximum inlet water temperature		40° C 104° F								
Minimum inlet water temperature		5° C 41° F								
Maximum intake depth		1 m - 3,3 ft (for no longer than 10÷15 mins: 3 m – 9.8 ft)								
Maximum inlet water pressure		0,1 bar 1,45 psi								
PERFORMANCE AT MAXIMUM SPEED OF ROTATION Water flow at maximum pressure	l/min	99	115	136	135	161	182	208	249	285
	US gpm	26,2	30,4	35,9	35,7	42,5	48,1	54,9	65,9	75
Water flow at 0 bar	l/min	101	120	142	137	166	185	216	259	304
	US gpm	26,7	31,7	37,5	36,2	43,9	48,9	57,1	68,4	80
Maximum pressure	bar	50	50	50	50	50	50	50	50	70
	psi	725	725	725	725	725	725	725	725	1015
Sound level dB(A)		<70	<70	<70	<70	<70	<70	<70	<70	<70
WEIGHT	kg	42	42	58	45	60	60	76	76	110
	lb	93	93	128	99	132	132	168	168	243

All features and technical specifications are only indications. The Manufacturer reserves the right to modify the appliance as it deems necessary

2.1 IDENTIFICATION OF COMPONENTS

Please also refer to figures 1, 2, 4, and 5 which are located at the start of this operating and maintenance manual.

1	Pump support	**7**	Intake coupling	**13**	Oil level indicator
2	Valve	**8**	Intake /delivery valve cap	**14**	Safety valve
3	Pump shaft	**9**	Pump crankcase	**15**	Pump shaft protection
4	Volumetric oil compensator	**10**	Bypass coupling	**16**	Delivery coupling
5	Pressure accumulator	**11**	Intake manifold	**17**	Oil cap
6	Pump head	**12**	Delivery manifold	**18**	Identification label

2.2 SAFETY DEVICES

⚠ **CAUTION**

- *The machine which incorporates the pump must always be provided with the safety devices described below.*
- *If the safety valve cuts in repeatedly, immediately stop operation of the machine, which incorporates the pump, and have it tested by a* ***Skilled Technician.***
- *Any drainage from the safety valve must not leak into the environment.*
- *Should the protection of the pump shaft break or be damaged, the machine which incorporates the pump must not be used until it has been tested by a* ***Skilled Technician.***
- *Do not place hands or feet on the pump shaft protection.*

a) Safety valve
This is standard for certain versions and is available as an optional accessory for others.
It is an appropriately calibrated, maximum pressure valve that discharges excess pressure should any anomaly occur in the pressure adjustment system.
b) Pump shaft protection
This is standard for certain versions and is available as an optional accessory for others.
It is to prevent the operator from coming into contact with the moving parts of the pump shaft.
c) Pressure limit/adjustment valve
This is standard for certain versions and is available as an optional accessory for others.
This valve enables the adjustment of the operating pressure and permits the pumped fluid to return to the by-pass duct, thus preventing the creation of dangerous levels of pressure when delivery is closed or should pressure be set that is above permitted levels.
If a pressure limit/adjustment valve has devices to intercept/distribute the pumped liquid (e.g. taps), it is usually called a **pump control unit**. In this manual, the term **control unit** stands for both the pressure limit/adjustment valve and the pump control unit.

2.3 IDENTIFICATION LABEL

The identification label (18) contains the serial number and the main technical specifications for the pump: version, maximum delivery (at 0 bar/0 psi), delivery at maximum pressure, maximum pressure, and maximum speed of rotation.
The adhesive identification label is located in a visible position on the pump.

⚠ **CAUTION**

- *If the identification label deteriorates during use, contact your dealer or an authorised service centre so they can be replaced.*

3. DESIGNATED USE

⚠ **CAUTION**

- *This pump is to be used exclusively for:*
- *treating crops in agricultural and gardening applications;*
- *pumping water-based detergents and dyes;*
- *pumping water which is not for human consumption.*
- *The pump must not be used for:*
- *water based solutions whose density and viscosity is greater than those of water;*
- *solutions of chemical products if it is not known that they are compatible with the construction materials of the pump;*
- *seawater or water with a high concentration of salt;*
- *all fuels and lubricants;*
- *inflammable liquids or liquid gas;*
- *liquids for human consumption;*
- *all solvents and diluents;*
- *all paints;*
- *liquids at a temperature in excess of 40°C or less than 5°C;*
- *liquids containing granules or solid, suspended parts.*
- *The pump must not be used to wash people, animals, energized electrical appliances, delicate objects, the pump itself or the machine that it is part of.*
- *The accessories (standard and optional) used with the pump must be those endorsed by the Manufacturer.*
- *The pump is not suitable for use in certain situations such as in corrosive or explosive atmospheres.*
- *Contact the Manufacturer's service centre before use on board vehicles, ships or airplanes, as there may be additional instructions for use.*

Any other use is considered improper.
The Manufacturer is not liable for any damage caused by improper or incorrect use.

4. OPTIONAL ACCESSORIES

⚠ **CAUTION**

- *The operation of the pump may be impaired if unsuitable accessories are used and they may even make it dangerous. Only use original accessories endorsed by the Manufacturer.*
- *Refer to the documents provided with the optional accessories for information regarding their general use, safety warnings, installation and maintenance.*

The standard accessories for the pump can be integrated with the following range of accessories:

- safety valve
- protection for pump shaft
- control unit
- intake filter (deep filter)
- various shapes and sizes of intake couplings
- pressure gauge
- high pressure delivery pipe
- pipe reel
- various types of sprinkler lances
- indicator of ruptured diaphragm

Please contact your dealer for further information.

5. OPERATION

⚠ **CAUTION**

- ***The pump must not be put into operation if the machine in which it is incorporated does not comply with the safety requirements defined by European Directives. Their compliance is guaranteed if the CE mark is present together with the manufacturer's Declaration of Conformity for the machine that incorporates the pump.***
- *Before starting to use the pump, read both this manual and the manual for the machine that incorporates the pump carefully. It is important to be sure that you have fully understood how both the pump and the machine that incorporates the pump work concerning the interception of the liquids.*
- *The pump must be used with care and attention. It is your responsibility to make sure that any infrequent users have read this manual and are acquainted with the operation of the pump; otherwise do not allow others to use the pump. Pumps must not be used by children or by unauthorised personnel.*
- *Comply with the safety warnings in the operating and maintenance manual of the machine that incorporates the pump especially as regards the use of personal protection (protective glasses, headphones, facemasks etc).*
- *Do not use the pump if:*

- *the pump has been bumped*
- *there are obvious leaks of oil.*
- *there are obvious leaks of water.*

In these circumstances, the pump should be tested by a ***Skilled Technician.***

- *It is especially important to pay great attention when the pump is used in areas where there are moving vehicles as these can crush or damage the delivery pipe and the sprinkler lance.*
- *During operation, never leave the pump unattended and make sure it is out of reach of children and animals. Pay particular attention when using it in kindergartens, nursing homes and old people's homes, as unsupervised children, elderly people and disabled people may be present in such places.*
- *Before starting to use the pump, put on clothing which guarantees adequate protection against the possibility of incorrect manoeuvres of the jet of pressurised water. Do not operate the pump near people unless they are also wearing protective clothing.*
- *High-pressure jets of water can be dangerous if they are not used properly. Do not point the jet in the direction of people, animals, and energized electrical appliances or towards the machine which incorporates the pump.*
- *Hold the sprinkler lance firmly during use: when operating its control lever, the operator is subjected to the backlash of the high pressure.*
- *Do not point the jet towards oneself or other people in order to clean off clothing or footwear.*
- *Do not point the high-pressure jet towards materials, which contain asbestos or other harmful substances.*
- *Make sure that the pump's moving parts are adequately protected and that they are not accessible to unauthorised personnel.*
- *Do not come within reach of the pump's moving parts, even if they are adequately protected.*
- *Do not remove the protective devices of the pump's moving parts.*
- *Do not carry out any maintenance on the pump if it is in use.*
- *Follow the instructions in the "Designated Uses" section.*
- *Do not modify the conditions of the installation of the pump, especially its attachment and its hydraulic connections.*
- *Do not operate any taps installed on the pump if they are not connected to an application that*

prevents the accidental leakage of the liquid being pumped.
- *Do not tamper with controls and safety devices.*
- *The connection of the machine that incorporates the pump to the mains electric supply must be carried out by a Qualified Electrician according to the current regulations in the country where it is to be used.*
- *If the machine that incorporates the pump operates with a combustion engine, it must not be used in enclosed spaces.*

5.1 PRELIMINARY PROCEDURES

⚠ **CAUTION**
- *Complete the Manufacturer's recommended preliminary procedures for the machine that incorporates the pump.*
- *Check that all the delivery parts are closed or connected to applications, which are closed (for example, closed tap or closed sprinkler lance).*
- *Do not exceed the maximum level of accumulator inflation pressure (when present), indicated in the following table, at any time.*
- *A **Skilled Technician** must complete the special maintenance procedures.*

a) When the pump is not in use, check that the oil level either corresponds to the reference notch on the volumetric compensator (4) or is visible from the level cap (also see fig. 6), according to the type of pump.
Remember that the level of the oil must always be checked when the pump is not in use and has cooled down completely.
Refer to the types of lubricants listed in the **"FEATURES AND TECHNICAL SPECIFICATIONS"** section if it is necessary to top up the oil.

⚠ **CAUTION**
- *Pumps BP 40/15, BP 60, P48 and P48 AP do not have a volumetric compensator therefore, contact a Skilled Technician if a top up is necessary*

b) Check that the inflation of the pressure accumulator, if present, is correct using a common compressed air gun with a pressure gauge, i.e. the type used to check the pressure of motor vehicle tyres.
Inflation depends on the range of pressure that the pump must operate in, according to the following table:

PUMP OPERATING PRESSURE		INFLATION PRESSURE OF ACCUMULATOR	
bar	psi	bar	psi
2-5	29-73	2	29
5-10	73-145	2-5	29-73
10-20	145-290	5-7	73-102
20-50	290-725	7	102

WARNING
- For applications where the pump uses a cardan shaft, strain on the pump shaft must be avoided caused by incorrect use of the cardan shaft (poor lubrication of moving parts, incompatible turning radius for type of cardan shaft used).
- In case of use at very low temperatures, check that ice does not form inside the pump.
- Complete all routine maintenance, especially concerning the oil.

5.2 HYDRAULIC CONNECTIONS

⚠ **CAUTION**

- *Do not connect up to the mains supply of drinking water.*
- *All pipes must be securely fixed to the relative coupling with grips.*

Refer to fig. 3 for the hydraulic intake, delivery and bypass connections: this depicts the general layout of a hypothetical machine incorporating the pump. Also refer to the following table:

1	Tank
2	Intake filter
3	Intake circuit
4	Pump
5	Delivery circuit
6	By pass circuit
7	Sprinkler lance (typical application)

a) For use with a sprinkler lance:
- Fully unroll the high-pressure pipe.
- Use the appropriate grip to connect the high-pressure pipe to a tap on the pump or on the control unit.
- Make sure the lever on the lance is closed and then connect the lance to the high-pressure pipe.

b) Connect the intake pipe to the relative coupling if the Manufacturer of the machine incorporating the pump has not already done so. Check the filter is clean.

WARNING

- The intake of the pump must use a tank at atmospheric pressure and the level of the liquid must be between 1m / 3.3ft above and 1 m /3.3 ft below the intake coupling (see fig. 8); never connect the pipe to pressurized water pipes.
- For periods of 10÷15 min, the intake of the pump can operate at drops of up to 3m/ 9.8 ft: it must not operate at drops in excess of this.
- The pump must be provided with an adequate intake filter. In case of doubt, contact a **Skilled Technician**. Check that the filter is perfectly clean at all times.
- The internal diameter of the intake and bypass pipes must be equal to the external diameter of the intake and bypass couplings respectively. They must have a nominal pressure of 10 bar /145 psi
- The internal diameter of the delivery pipes must be equal to the external diameter of the delivery couplings. Their nominal pressure must not below the maximum pressure of the pump.
- Do not supply the pump with water at a temperature in excess of 40°C/104°F or below 5°C/ 41°F.
- Do not operate the pump for a long time if it is not connected to a water supply.
- Do not supply the pump with salt water or water containing impurities. In this event, run the pump for a few minutes with clean water.

5.3 START UP

⚠ **CAUTION**

- *Complete any operations required to start up the machine that incorporates the pump as recommended by its manufacturer.*
- *Read the instructions and warnings on the label of chemicals to be distributed by the*

pump to take the appropriate steps in order to avoid danger for the operator or for the environment.

- *Store all chemicals in a safe place out of children's reach.*
- *Should any chemicals come into contact with your eyes, wash immediately with water. Contact a doctor without delay and remember to take the container of chemicals with you.*
- *If any chemicals are swallowed, do not provoke vomiting. Contact a doctor without delay and remember to take the container of chemicals with you.*
- *Operating pressure must never exceed the maximum toleration level of the pump (refer to the **"FEATURES AND TECHNICAL SPECIFICATIONS"** section).*

For the following points, please also refer to the documentation which is provided with the control unit.

a) Set the delivery pressure to zero on the control unit so that it enters its "bypass" status.
b) Start up the pump so that it can prime.
c) Set the control unit to its "pressure" position.
d) Turn the pressure adjustment knob on the control unit until the required amount of pressure is reached.

WARNING

- To allow the pump to prime quickly, follow the instructions at point (a) every time the pump is drained of liquid.
- We recommend checking the level of the oil during the initial hours of its operation and to top up the liquid if necessary as instructed in the '**PRELIMINARY PROCEDURES'** section.

6. SWITCHING OFF AND STORAGE

6.1 SWITCHING OFF

⚠ **CAUTION**

- *Complete any operations required to switch off the machine that incorporates the pump as recommended by its manufacturer.*

No part of the pump must be in motion and no pipe must contain liquid under pressure.

*a) Set the delivery pressure to zero as described in the **"START UP"** section.*
b) Switch the pump off.

6.2 STORAGE

⚠ **CAUTION**

- Complete any operations required to store the machine that incorporates the pump as recommended by its manufacturer.

WARNING

- Refer to the use and maintenance manual for the machine that incorporates the pump. After use, complete a cleaning cycle, making the pump take up clean water. Never store the pump with pumped liquid inside it.
- **The pump is not frost proof.**
  In order to prevent the formation of ice inside the pump in cold areas, we recommend making the pump take up a motor vehicle grade anti-freeze before starting the "storage" procedures (diluted as instructed for the minimum temperature that the pump will be exposed to) and then drain it completely, making it operate for a few minutes without taking up any liquid.

⚠ **CAUTION**

- *dispose of anti-freeze liquid correctly; do not throw it away in the environment.*

7. CLEANING AND MAINTENANCE

⚠ **CAUTION**

- *Only start cleaning and maintenance once the instructions in the '**Switching off**' section have been completed, i.e.* ***no part of the pump must be in motion and no pipe must contain liquid under pressure..***
  It is particularly important to always disconnect the electricity supply, if present.

7.1 ROUTINE MAINTENANCE

Follow the instructions in the **'SWITCHING OFF'** section and abide by the recommendations in the table below.

INTERVAL FOR MAINTENANCE	ACTION
Each time used	Check the level and the status of the oil.
	Check the water intake filter and clean if necessary
Every 50 hours	Check the accumulator inflation pressure (when present).
	Check the water intake circuit is intact.
	Check the pump is securely fastened to the structure of the machine that incorporates the pump.
	Should the pump not be fastened securely, do not use the machine under any circumstance and contact a Skilled Technician (1)

(1) This must be controlled more frequently if the pump operates in circumstances with heavy vibrations (crawler tractors, combustion engines, etc.).

WARNING

- During use, the pump should not be too noisy and large amounts of water or oil should not drip from underneath it.

In this event, a Skilled Technician should test the appliance.

7.1.1 Diaphragm rupture

The rupture of one or more diaphragms can result in the mechanical parts of the pump being damaged by the liquids being pumped.
The following are symptoms of possible diaphragm rupture:

- oil takes on a whitish appearance (symptom of water in the oil)
- excessive consumption of oil
- sudden lack of oil in the volumetric compensator

WARNING

- To avoid the negative consequences of this malfunction, stop operation of the pump immediately and contact a **Skilled Technician** without delay (within 24 hours) who will take the necessary action.
  If it is not possible to contact a **Skilled Technician** within the above time in case of diaphragm rupture, we recommend you drain the pump crankcase of the mixed oil and pumped liquid and then fill it with oil or diesel to prevent the formation of rust.
- The following are frequently the causes of diaphragm rupture:

- bottlenecks in the intake circuit (inadequate pipe section, dirty filter, very dense liquid being pumped, etc)
- the use of very aggressive chemicals

7.2 SPECIAL MAINTENANCE

⚠ **CAUTION**

- *Only Skilled Technicians are authorised to carry out special maintenance.*
- *Dispose of waste oil correctly; do not throw it away in the environment*

Follow the instructions in the table below for special maintenance.

INTERVAL FOR MAINTENANCE	ACTION
Every 300 hours	Check the intake and delivery valves (1)
At the end of every season or once a year	Check diaphragms and replace if necessary (2) Replace the oil (3) Check the pump screws are tight (4)

1) check more frequently if liquids are used with suspended abrasive particles.
2) we recommend replacing diaphragms regardless of their condition if particularly aggressive chemicals are used.
3) Oil must be changed when diaphragms are replaced; first oil change must take place after 300 hours
4) check more frequently if the pump operates in conditions of heavy vibration.

WARNING

- The data in the table are indications. Maintenance may be required more frequently in cause of particularly heavy use.

8. DISMANTLING AND DISPOSAL

Only trained personnel are allowed to dismantle the pump in accordance with the current regulations in the country where it is installed.

9. PROBLEMS, CAUSES AND SOLUTIONS

⚠ **CAUTION**

- *Before undertaking any action, follow the instructions in the **"SWITCHING OFF"** section. If it is not possible to restore correct operation of the pump using the information in the table below, contact a **Skilled Technician.***

PROBLEM	CAUSE	SOLUTION
The pump does not prime	Water intake Adjustment valve positioned under pressure	Check the intake circuit is intact Set pressure to zero and put pump in bypass
The pump does not reach maximum pressure.	Speed of pump rotation is inadequate Unsuitable application (for example: worn nozzle or too large nozzle)	Restore correct rotation speed Replace application
Irregular pressure and water flow (pulsating)	Water intake	Check the intake circuit is intact
Excessive vibration in delivery circuit	Pressure accumulator not correctly inflated	Restore correct inflation
Excessive noise associated with drop in the oil level	Bottlenecks in intake circuit	Check intake circuit
Excessive consumption of oil and/or oil is whitish colour (presence of water in oil)	Rupture of one or more diaphragms	Refer to instructions in section 7.1.1.

PART TWO

(only for use by **Skilled Technicians**)

⚠ **CAUTION**

- *This part of the manual is only for use by Skilled Technicians and is not meant to be used by the end user of the pump.*

1. REMOVING THE APPLIANCE FROM ITS PACKING MATERIALS

⚠ **CAUTION**

- *Protective gloves and glasses must be worn when removing the appliance from the packing materials to prevent injury to the hands and eyes.*
- *The packing materials (plastic bags, staples etc.) must not be left in reach of children, as they are potentially dangerous.*
- *The packing materials must be disposed of according to current regulations in the country where the pump is installed.*
  In particular, plastic bags and packaging must never be abandoned, as they are harmful to the environment.
- *After removing the appliance from the packing materials, check that no parts are missing and check that the identification label is present and is legible.*
  In case of doubt, do not use the pump under any circumstance and contact the dealer.

1.1 STANDARD ACCESSORIES

Check that the pump is always complete with the following parts:

- operating and maintenance manual
- guarantee certificate

Should there be any problems, contact the dealer

⚠ **CAUTION**

- *This operating and maintenance manual and the guarantee certificate must always accompany the pump and the end user must make them available.*

2. INSTALLATION

⚠ **CAUTION**

- *The Skilled Technician must follow the instructions for installation in this manual; in particular, the specifications of the motor (electric or combustion) to be used in conjunction with the pump must comply with the operation and the construction features of the pump (power, rotation speed, flanging, etc.) as illustrated in the technical documentation provided by the Manufacturer.*
- *The machine that incorporates the pump must be constructed so that it guarantees compliance with safety regulations laid down by European Directives. This is guaranteed if the CE mark is present and by the Declaration of Conformity issued by the Manufacturer of the machine that incorporates the pump.*
- *The pump must be installed and must be operated in a horizontal position.*
- *The pump must be secured so that it is stable.*
- *As the pump is a volumetric type, it must always be equipped with a pressure limitation/ adjustment valve.*

2.1. APPLICATIONS

⚠ **CAUTION**

- *Protect moving parts with the appropriate protection devices*
- *The maximum rotation speed for the operation of the pump must be between 400 and 550 rpm. (500 rpm for the CLA 3000).*
- *The base of the pump must be securely fastened to a stable base.*
- *In the case of a through shaft, do not exceed the maximum available power indicated in the table below:*

Pump	Type of through shaft (1)	Available power on the through shaft	
		[CV]	[kW]
BP 151 BP 171 BP 205 BP 235 BP 280 BP 265 BP 305	Cylinder 30 mm Ø	30	22
	1”3/8M Cardan	45	33
P 48 AP	6 holes with three M8 screws	6	4,4
	6 holes with three M10 screws	9	6,6
APS 41	6 holes with three M8 screws	6	4,4
	6 holes with three M10 screws	9	6,6
APS 51 APS 61 APS 71	6 holes with three M8 screws	6	4,4
	6 holes with three M10 screws	9	6,6
	1”3/8F Cardan	22	16
	1”3/8M Cardan	30	22
APS 96	6 holes with three M8 screws	6	4,4
	6 holes with three M10 screws	9	6,6
	1”3/8M Cardan	45	33
APS 101 APS 121 APS 145	1”3/8F Cardan	22	16
	1”3/8M Cardan	45	33
APS 141 APS 166	1”3/8M Cardan	45	33
IDS 1000 IDS 1300 IDS 1400	6 holes with three M8 screws	6	4,4
	6 holes with three M10 screws	9	6,6
	1”3/8F Cardan	22	16
	1”3/8M Cardan	45	33
IDS 1401 IDS 1701 IDS 2001	1”3/8M Cardan	22	16
	1”3/8M Cardan	45	33
IDS 2200 IDS 2600	1”3/8M Cardan	45	33
CLA 3000	1”3/8M Cardan	40	29

((1) the application of any kits to obtain different types of through shafts (for example, a kit to go f rom 1”3/8F to 6 holes) may result in the reduction of the available power on the through shaft. In this case, follow the Manufacturer’s instructions and/or contact a Service Centre.

The many available applications for the pumps described in this manual are summarised in the tables below.
Always contact the dealer or the Manufacturer to identify the correct application. The applications for the pump must always be executed according to the general rules of good mechanics. The Manufacturer's Service Centre is at the disposal of the installer for any further information.

2.2 HYDRAULIC CONNECTIONS

Follow the instructions for connections which are contained in section 5.2 of part one.
It is particularly important that the size of the intake circuit must be adequate so that the intake coupling of the pump is not subject to:

- pressure in excess of 0.1 bar / 1.45 psi:
- vacuum in excess of 0.25 bar 7 3.63 psi.

Intake vacuum is tolerated up to a maximum of 0.45 bar/6.53 psi but only for periods of operation of 10-15 minutes (normally enough time to fill up the tank of the machine where the pump is installed, for example).

	Non-through shaft 1" 3/8 male Cardan	Through shaft 1" 3/8M Cardan 1" 3/8M Cardan	Non-through shaft cylindrical 30mm Ø	Through shaft 1" 3/8M Cardan cylindrical 30mm Ø	Quick Coupling 1" 3/8F Cardan	Pulley	Hydraulic motor SAE flange with two holes	Hydraulic pump group 2	Reducer	Overdrive
BP 20/15	VD		STD		(1)	(2)				
BP 40/15	STD		VD		(1)		(4)			
BP 60	STD		VD		(1)		(4)		(3)	
BP 75	STD		VD		(1)		(4)		(3)	
BP 105-125	STD		VD		(1)		(4)		(3)	
BP 151-171		VD		STD			(4)	(4)		(4)
BP 205-235		VD		STD			(4)	(4)		(4)
BP 260		VD		STD			(4)	(4)		(4)
BP 265-305		VD		STD			(4)	(4)		

STD = Standard
VA = Version available
(1) = Available with appropriate kit
(2) = Pulley available: 1 channel Z Øp 220
(3) = Reducer available: 1:6.44
(4) = Contact the dealer or Manufacturer for information on the correct kit to be used

	Non-through shaft with 6 holes	Non-through shaft with 6 holes and 1"3/8F Cardan	Through shaft 1"3/8M Cardan 6 holes and 1"3/8F Cardan	Through shaft Ø 25 mm 6 holes	Non-through shaft 1"3/8 male Cardan	Through shaft 1"3/8M Cardan 1"3/8M Cardan	Non-through shaft cylindrical 30 mm Ø	Through shaft 1"3/8M Cardan cylindrical 30mm Ø	Quick Coupling 1"3/8F Cardan	Pulley	Hydraulic Motor SAE flange with two holes	Reducer	Overdrive	Flanges for agricultural machinery
MP 20-30	STD				(1)		(1)		(1)	(2)	(4)	(3)		(4)
P 48	STD				(1)		(1)		(1)	(6)	(4)	(5)		(4)
P 48 AP				STD		(1)		(1)	(1)	(6)	(4)	(5)	(4)	(4)

STD = Standard
VA = Version available
AP = Through Shaft Version
(1) = Available with appropriate kit
(2) = Pulley available: 2 channels A Øp 247; 2 channels A Øp 292
(3) = Reducer available: 1:1.66; 1:2.5; 1:8.89; 1:5.09; 1:6.44
(4) = Contact the dealer or Manufacturer for information on the correct kit to be used
(5) = Reducer available: 1:1.66; 1:2.5; 1:6.44; 1:5.09
(6) = Pulley available: 2 channels A Øp 172; 2 channels A Øp 247; 2 channels A Øp 292; 2 channels B Øp 290; 2 channels B Øp 350

	Through shaft 1" 3/8M Cardan 1" 3/8M Cardan	Non-through shaft with 6 holes	Non-through shaft with 6 holes and 1" 3/8F Cardan	Through shaft 1" 3/8M Cardan 6 holes and 1" 3/8F Cardan	Through shaft 25mm Ø cone shaped– 6 holes	Non-through shaft 1" 3/8 male Cardan	Non-through shaft cylindrical 30mm Ø	Through shaft 1"3/8M Cardan cylindrical 30mm Ø	Through shaft 1" 3/8M Cardan 6 holes	Non-through shaft cylindrical 1"	Through shaft 1" 3/8M Cardan cylindrical 1"	Through shaft 1" 3/8M Cardan 1" 3/8F Cardan	Quick coupling 1" 3/8F Cardan	Pulley	Hydraulic motor SAE flange with two holes	Hydraulic pump group 2	Reducer	Overdrive	Flanges for agricultural machinery
APS 31		STD				(1)	(1)			(1)			(1)	(2)	(4)		(3)		(4)
APS 41		STD				(1)	(1)			(1)			(1)	(2)	(4)		(5)		(4)
APS 41AP	(1)				STD			(1)			(1)		(1)	(2)	(4)		(5)	(4)	(4)
APS 51			STD			(1)	(1)			(1)			(1)	(6)	(4)		(7)		(4)
APS 51AP	STD			VD				(1)			(1)		(1)	(6)	(4)		(7)	(4)	(4)
APS 61			STD			(1)	(1)			(1)			(1)	(9)	(4)		(8)		(4)
APS 61AP	STD			VD				(1)			(1)		(1)	(9)	(4)		(8)	(4)	(4)
APS 71			STD			(1)	(1)			(1)			(1)	(9)	(4)		(8)		(4)
APS 71AP	STD			VD				(1)			(1)		(1)	(9)	(4)		(8)	(4)	(4)
APS 96	STD			VD				(1)			(1)		(1)	(10)	(4)		(11)	(4)	
APS 101-121	STD							(1)				VD		(12)			(13)	(4)	
APS145	STD							(1)				VD		(12)	(4)	(4)		(4)	
APS 141-166	STD																		
IDS 1000	STD			VD										(12)			(14)	(4)	
IDS 1300	STD			VD										(12)			(14)	(4)	
IDS 1400	STD			VD										(12)			(15)	(4)	
IDS 1401	STD			VD										(12)	(4)			(4)	
IDS 1701	STD			VD										(12)	(4)			(4)	
IDS 2001	STD			VD										(12)	(4)			(4)	
IDS 2200-2600	STD																		
CLA 3000	STD																		

STD = Standard
VA = Version available
AP = Through Shaft Version
(1) = Available with appropriate kit
(2) = Pulley available: 2 channels A Øp 172; 2 channels A Øp 247; 2 channels A Øp 292
(3) = Reducer available: 1:6.44; 1:8.89; 1:5.09; 1:1.66; 1:2.5
(4) = Contact the dealer or Manufacturer for information on the correct kit to be used
(5) = Reducer available: 1:6.44; 1:5.09; 1:1.66; 1:2.5
(6) = Pulley available: 2 channels A Øp 247; 2 channels A Øp 292; 3 channels A Øp 292; 3 channels A Øp 350
(7) = Reducer available: 1:6.44; 1:5.09; 1:1.66; 1:2.5; 1:4.33
(8) = Reducer available: 1:6.44; 1:5.09; 1:4.33
(9) = Pulley available: 3 channels A Øp 292; 3 channels A Øp 350
(10) = Pulley available: 3 channels A Øp 292; 3 channels A Øp 350; 3 channels B Øp 290
(11) = Reducer available: 1:4.33
(12) = Pulley available: 3 channels A Øp 350; 3 channels B Øp 292
(13) = Reducer available: 1:3; 1:4.28; 1:5.45; 1:7.5
(14) = Reducer available: 1:3; 1:3.75; 1:4.28; 1:5.45; 1:7.5
(15) = Reducer available: 1:3; 1:3.75; 1:4.28; 1:5.45; 1:6; 1:7.5

Manufacturer's Declaration
according to Directive: 98/37/EEC

Comet S.p.A.
Via G. Dorso, 4 - 42100 Reggio Emilia - Italia

declares under its sole responsibility that the pump in the series:

BP • P • MP • APS • IDS • CLA

with the serial number
(to be filled in by purchaser according to identification label)

_____

which this declaration refers to, is conform to the requirements of Directive 98/37/EEC.

The following standards were consulted to verify its conformity:

• EN 809 (1998) • EN907 (1997)

In accordance to the precepts established in Attachment II, point B of the above-mentioned Directive, the pump must not be put into operation before the machine that incorporates the pump has been declared compliant to this Directive's requirements.

Reggio Emilia, 9/3/1999

Baldi Renzo
(Presidente Comet S.p.A.)

COMET S.p.A. - Via G. Dorso, 4 - 42124 Reggio Emilia - ITALY
Tel. +39 0522 386111
E-Mail Italia: vendite@comet.re.it - fax +39 0522 386300
E-Mail Export: export@comet.re.it - fax +39 0522 386286
www.comet-spa.com

1610 0300 00 - 02/2005 - REV. 02